STABILIZED BALL VALVE TAP INSTALLATION INSTRUCTIONS

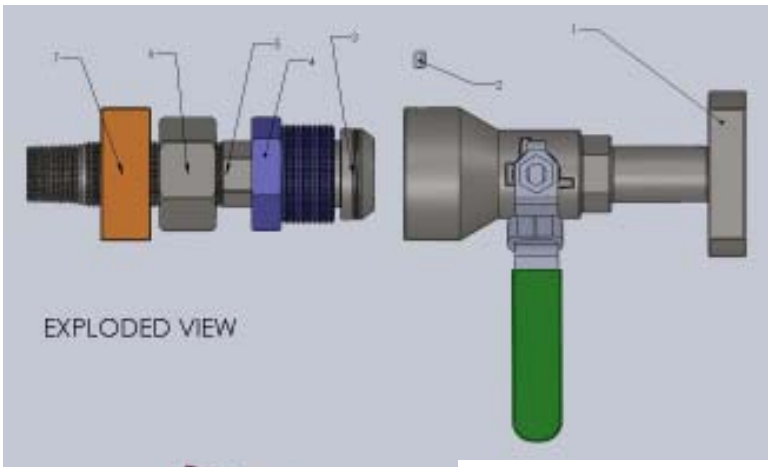

The SBV-AA Stabilized Ball Valve kit consisted of the following parts.

#	Name	Qty
1	Flanged valve body	2
2	8-32 set screw	2
3	O-ring	2
4	Swivel Nut	2
5	Pipe Mount	2
6	Stabilizer Nut	2
7	Foot	2

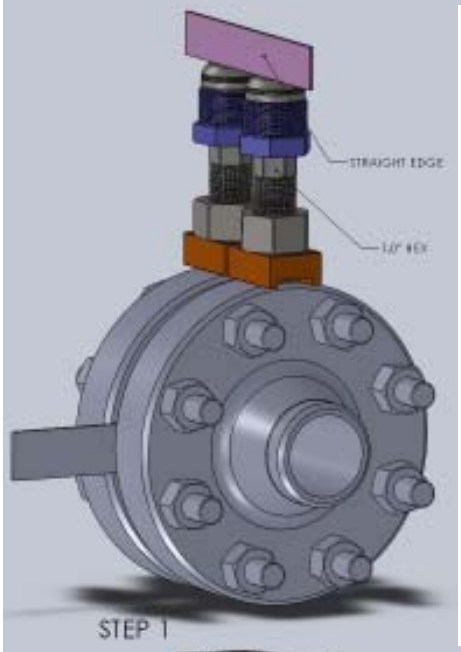

Step 1 – Install the pipe mounts

1. Part #'s 3, 4, 5, 6, & 7 should be pre-assembled. If not, please do so.
2. Do not remove the lubricant on the threads of #4. **This is important.**
3. Apply your company approved thread sealant to the pipe threads on #5
4. Thread #5 into the orifice fitting taps and tighten to your company specifications using the 7/8" hex shown in figure Step 1. Use a straight edge to keep the tops of #5 level. There should be no visible gap between the straight edge and the flats of #5.
5. Align the feet #7 and tighten the stabilizer nut #6 against them.

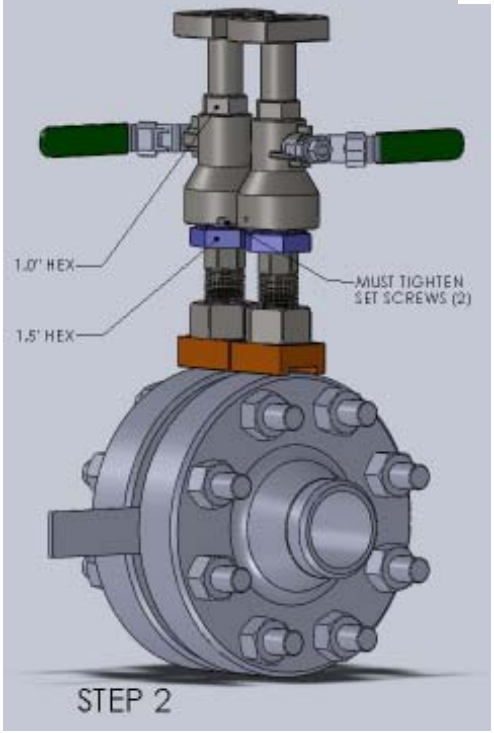

Step 2 – Install the flanged ball valves

1. Make certain that the top of #5 and the female attaching point of #1 are clean. There should be a light film of silicone grease at both points. Slide the flanged ball valve #1 on to pipe mount #5. You should feel the o-ring #3 compress slightly. Align the flanges so they are parallel. This can be done by pre-mounting the manifold without a final torque of flange to manifold bolts or a 5/8" square bar placed between the flanges will work quite well
2. Screw the swivel nuts #4 into place and make them finger tight.
3. Attach a 1.0" combination wrench to the 1.0" hex shown in figure Step 2.
4. Attach a 1.5" wrench to the swivel nut #4.
5. Using the 7/8" wrench to keep the flanged valve from turning, tighten the swivel nut with the 1.5" wrench. The swivel nut should be tighten to a minimum of 50 foot pounds of torque. This is a good tug for a 200 pound person, but a torque wrench is best.
6. Re-check alignment of the flanges for parallelism and height.
7. Tighten the set screw #2 in place. **This is very important.**
8. Proceed to install the other components of the hook-up according to their instructions.